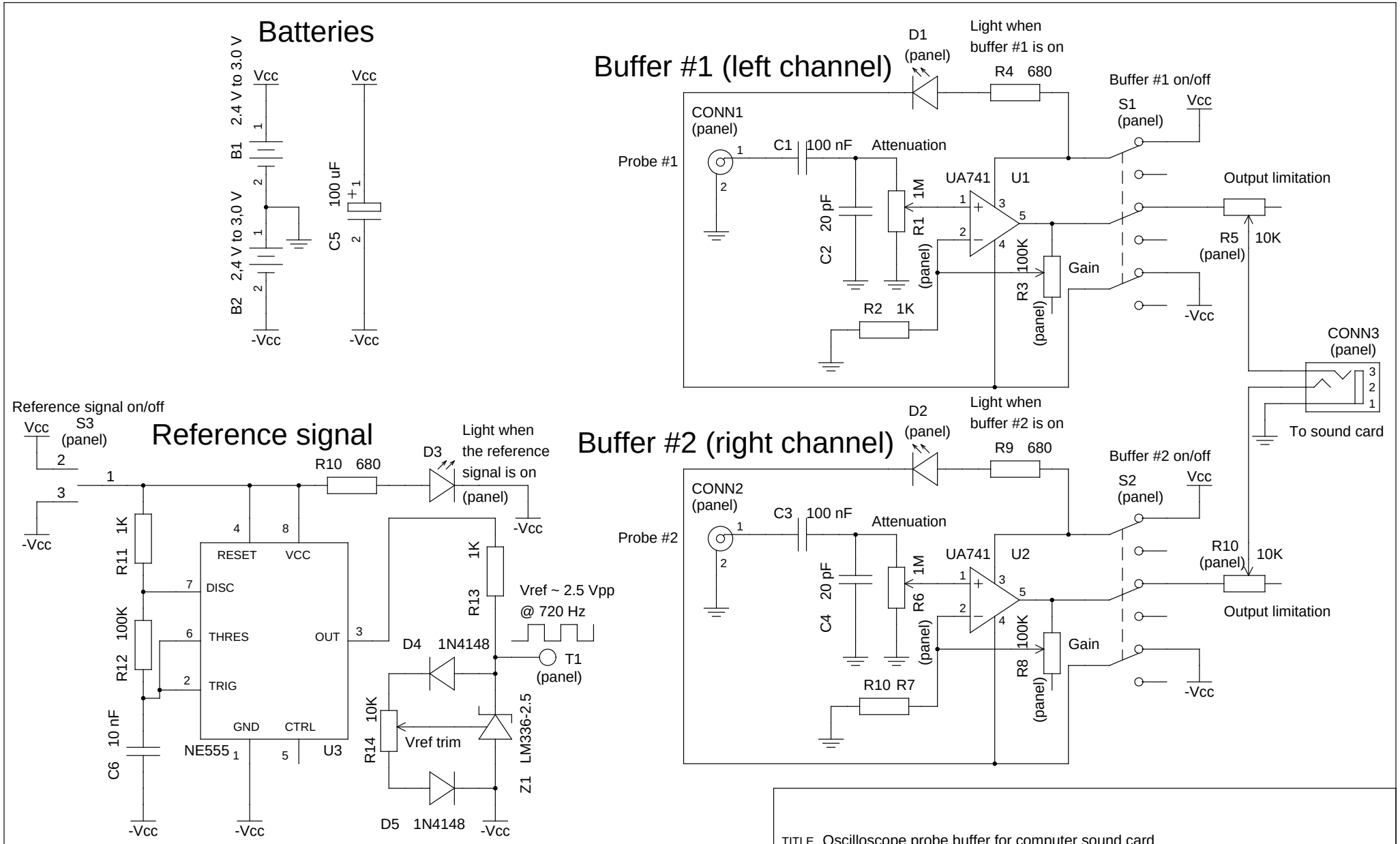
Batteries
B1 2.4 V to 3.0 V
B2 2,4 V to 3,0 V
C5 100 uF
Vcc
-Vcc
Buffer #1 (left channel)
D1 (panel)
Light when buffer #1 is on
R4 680
Buffer #1 on/off
S1 (panel)
CONN1 (panel)
Probe #1
C1 100 nF
Attenuation
C2 20 pF
R1 1M (panel)
UA741 U1
R3 100K (panel)
Gain
R2 1K
Output limitation
R5 (panel) 10K
CONN3 (panel)
To sound card
Buffer #2 (right channel)
D2 (panel)
Light when buffer #2 is on
R9 680
Buffer #2 on/off
S2 (panel)
CONN2 (panel)
Probe #2
C3 100 nF
Attenuation
C4 20 pF
R6 1M (panel)
UA741 U2
R8 100K (panel)
Gain
R10 R7
R10 (panel) 10K
Output limitation
Reference signal
Reference signal on/off
S3 (panel)
R10 680
D3
Light when the reference signal is on (panel)
R11 1K
R12 100K
C6 10 nF
RESET
VCC
DISC
THRES
OUT
TRIG
GND
CTRL
NE555
U3
R13 1K
Vref ~ 2.5 Vpp @ 720 Hz
T1 (panel)
D4 1N4148
D5 1N4148
R14 10K
Vref trim
Z1 LM336-2.5
Note: use something better than the UA741 if available.
TITLE Oscilloscope probe buffer for computer sound card
FILE: buffer.sch
REVISION: 2
PAGE 1 OF 1
DRAWN BY: Sergio García-Cuevas González