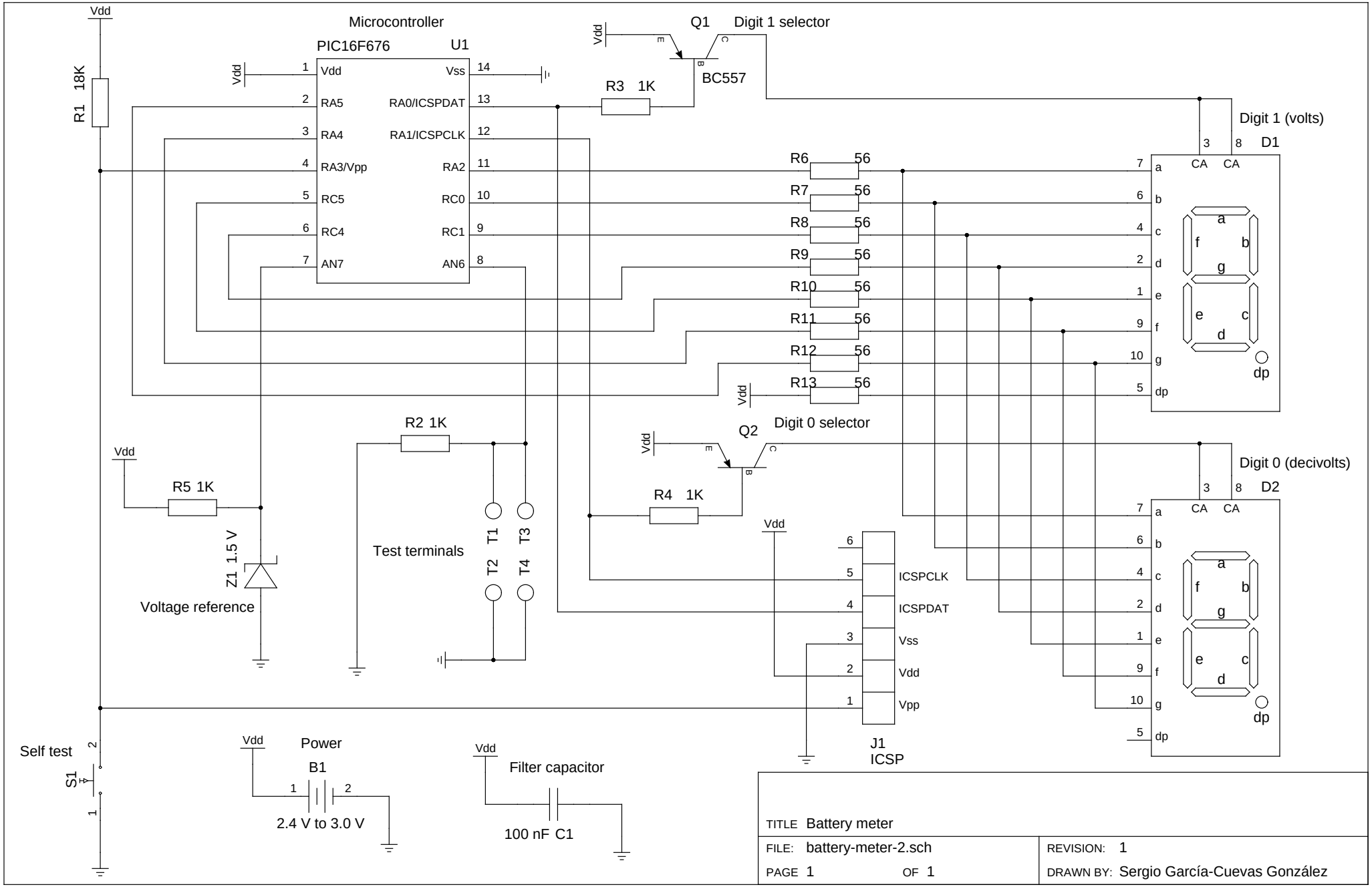
Microcontroller
PIC16F676
U1
Vdd
Vss
RA5
RA4
RA3/Vpp
RC5
RC4
AN7
RA0/ICSPDAT
RA1/ICSPCLK
RA2
RC0
RC1
AN6
R1 18K
R3 1K
Q1
Digit 1 selector
BC557
R6 56
R7 56
R8 56
R9 56
R10 56
R11 56
R12 56
R13 56
Digit 1 (volts)
D1
CA
a
b
c
d
e
f
g
dp
Q2
Digit 0 selector
R4 1K
Digit 0 (decivolts)
D2
R2 1K
R5 1K
Z1 1.5 V
Voltage reference
Test terminals
T1
T2
T3
T4
ICSPCLK
ICSPDAT
Vss
Vdd
Vpp
J1
ICSP
Self test
S1
Power
B1
2.4 V to 3.0 V
Filter capacitor
100 nF C1
TITLE Battery meter
FILE: battery-meter-2.sch
REVISION: 1
PAGE 1 OF 1
DRAWN BY: Sergio García-Cuevas González